H&H - Lab 1 Video

1. Network
   - Topology
     - logical
     - physical
2. - information to configure
3. - packet - flow diagram
   - handy when we know the flow
4. - Ethernet Frame → program 1

   ping, traceroute, wireshark

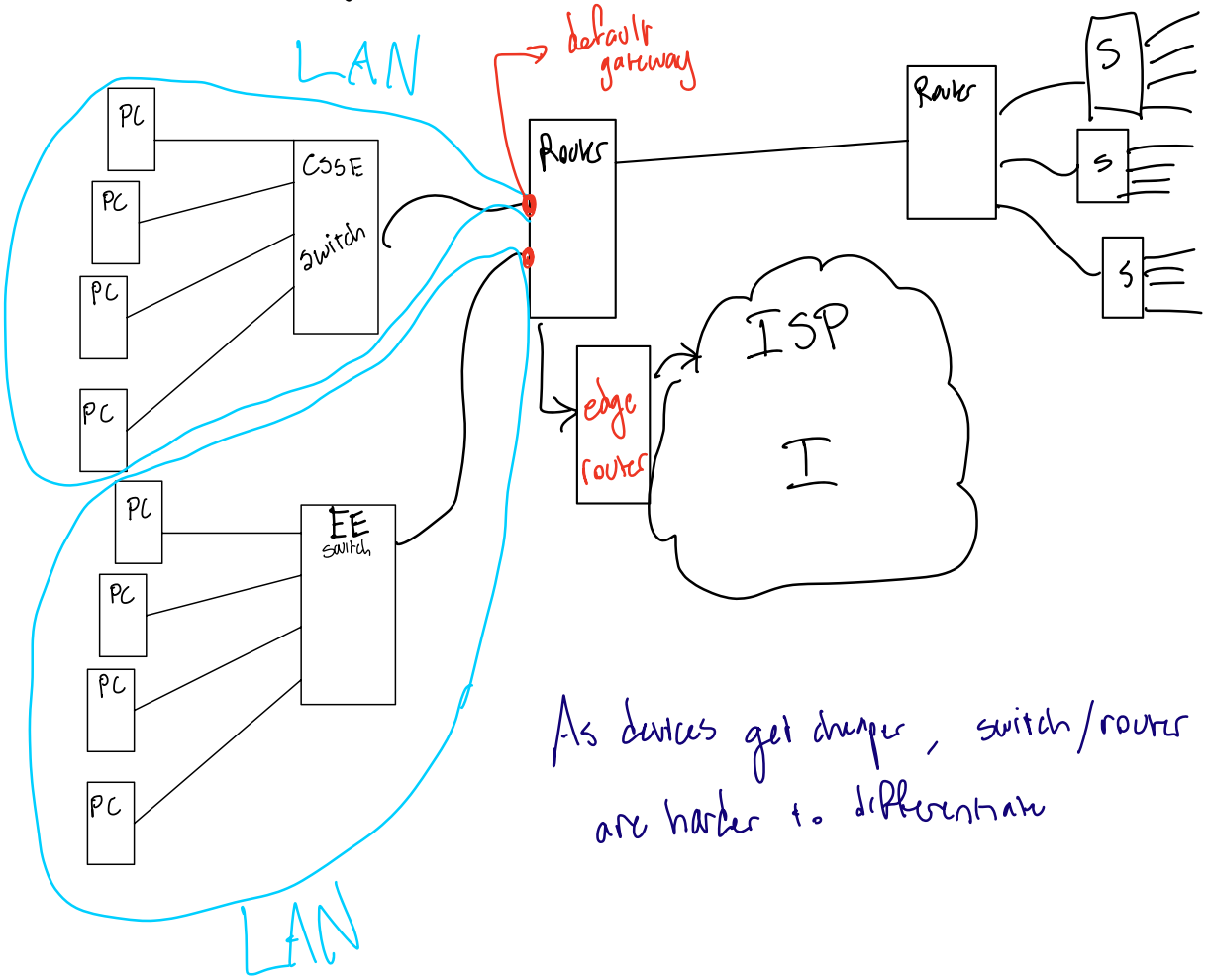

As devices get cheaper, switch/router are harder to differentiate

Local Area Networks

- everything connected to one router interface

Hierarchy:

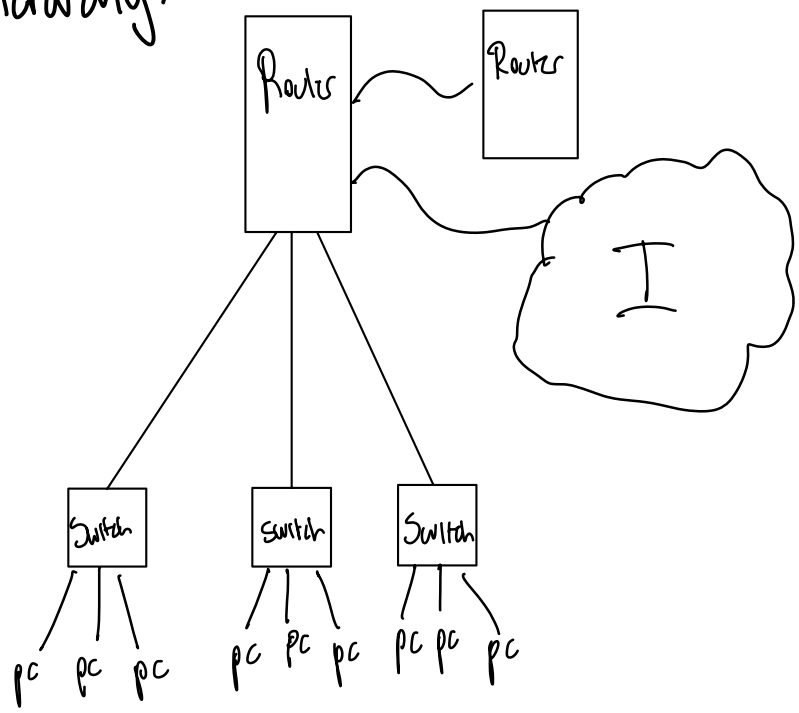

Home Router:

Router & switch & possibly modem

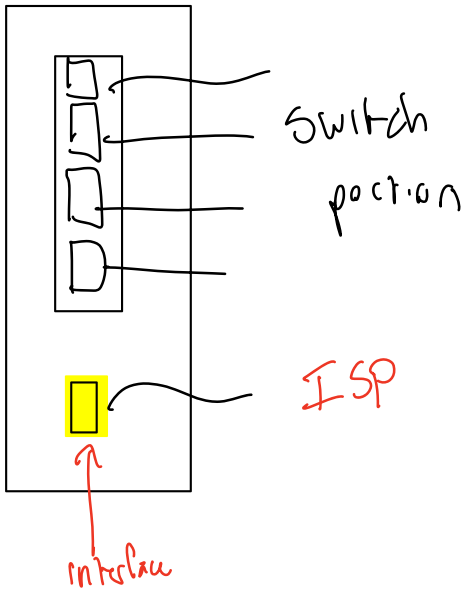

because it's our router, it's our default gateway

technically an edge router

- edge device goes from internal addressing scheme to external addressing scheme.

Modem : Modulator / Demodulator

Analog → Digital

Digital → Analog

⇝ signaling on wire / fiber is analog then converted to digital

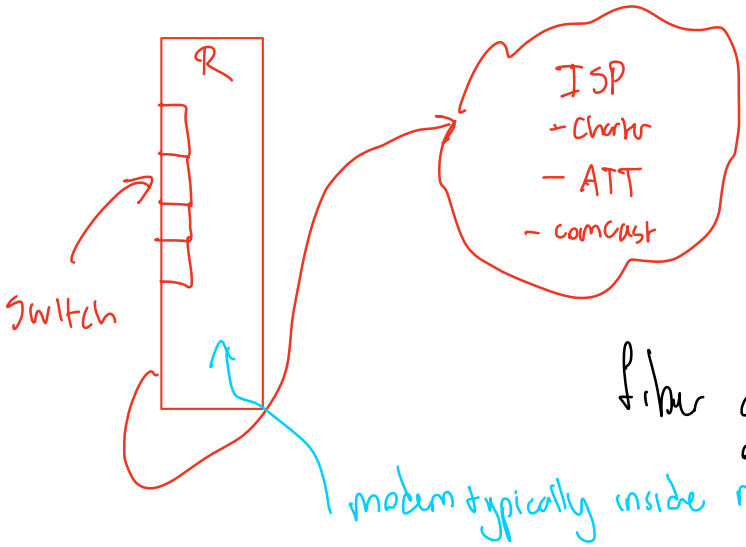

fiber converter can be used or BNC to coaxial

2 Info needed to configure the network

ETH is digital

Data – digital

Signal – how bits are put on the wire

Network Interface Card

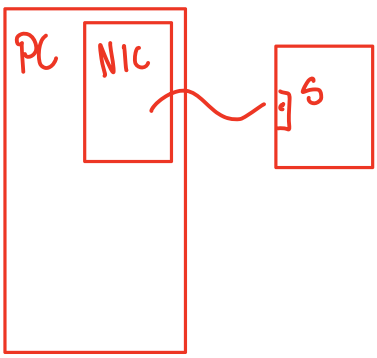

- negotiate how many bits/second
- also negotiate full / half duplex
- when you get bits, it's self clocking

switch is always LAN, router is the edge of the LAN

- need IP address

192.169.3.4

↑ dot decimal format

each value is 8 bits (0 -> 255)

= 32 bits (IPV4)

INFO needed

IP
Mask
gateway — IP address of router you're attached to

- need subnet mask (or just mask)

255.255.255.0

- need default gateway address

- not required but helpful:

IP address of DNS servers

DNS = domain name services

- translates a name to an IP address

google.com → 20.7.3.4

Packet Flow Diagrams

diagram or draw <u>information flow</u>

we use it for designing or understanding our implementation

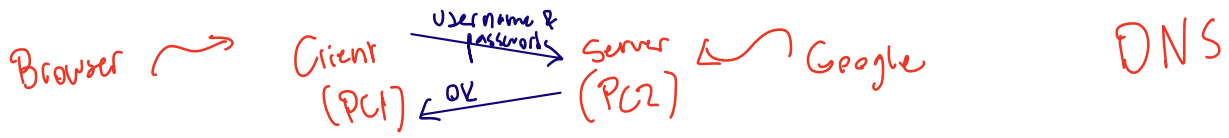

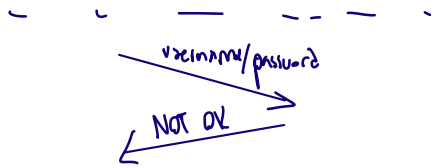

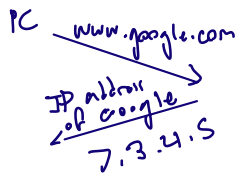

Ethernet Frames (owned by IEEE)

PC - PC or PC - switch communication on LAN only

you want to send data across network

↳ network is typically ethernet network

↳ ethernet expects format → frame

Dest Address	Source address	2 bytes type	Data	error detection
6 bytes	6 bytes			

only NIC sees this

Address = MAC address — medium access control

Program 1 → pointer to block of memory

first thing = MAC address of destination

MAC Address structure

← Hardware address of NIC

3 bytes	3 bytes
Vendor	Unique #

- Cisco
- netgear
- etc.

Unique to vendor

LAN - ethernet

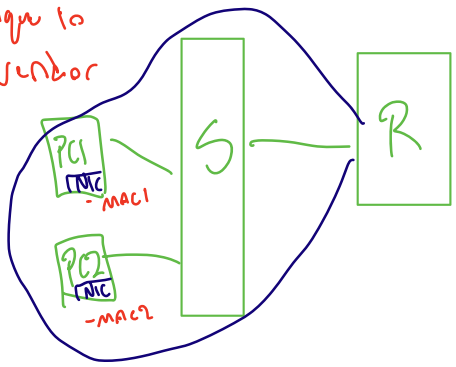

$PC_1 \rightarrow PC_2$

Dest MAC	Source MAC	Type		error detection
MAC2	MAC1	IP	IP	

Wireshark

DEST
SRC

- inspect packets 0x0800 type = IP

In program
- parse Ethernet header
- parse IP header

ping - tells us if something is reachable

traceroute - all the routers between you and destination
↳ remember - routers

last hop = last hop before you get time outs